DATA SHEET

NEC

MOS INTEGRATED CIRCUIT

μPD720113

USB2.0 HUB CONTROLLER

The μPD720113 is an USB 2.0 hub device that comply with the Universal Serial Bus (USB) Specification Revision 2.0 and work up to 480 Mbps. USB2.0 compliant transceivers are integrated for upstream and all downstream ports. The μPD720113 works backward compatible either when any one of downstream ports is connected to an USB 1.1 compliant device, or when the upstream port is connected to a USB 1.1 compliant host.

Detailed function descriptions are provided in the following user's manual. Be sure to read the manual before designing.
μPD720113 User's Manual: S16619E

FEATURES

- Compliant with Universal Serial Bus Specification Revision 2.0 (Data Rate 1.5/12/480 Mbps)
- Certified by USB implementers forum and granted with USB 2.0 high-speed Logo
- High-speed or full-speed packet protocol sequencer for Endpoint 0/1
- 7 (Max.) downstream facing ports
- All downstream facing ports can handle high-speed (480 Mbps), full-speed (12 Mbps), and low-speed (1.5 Mbps) transaction.
- Supports split transaction to handle full-speed and low-speed transaction at downstream facing ports when Hub controller is working at high-speed mode.
- One Transaction Translator per Hub and supports four non-periodic buffers
- Support self-powered mode
- Supports Over-current detection and Individual power control
- Supports configurable vendor ID, product ID, string descriptors and others with external Serial ROM
- Supports "non-removable" attribution on individual port
- Uses 30 MHz X'tal, or clock input
- 2.5 V and 3.3 V power supplies

The information in this document is subject to change without notice. Before using this document, please confirm that this is the latest version.
Not all devices/types available in every country. Please check with local NEC representative for availability and additional information.

Document No. S16618EJ1V0DS00 (1st edition)
Date Published May 2003 NS CP (K)
Printed in Japan

© NEC Electronics Corporation 2003

ORDERING INFORMATION

Part Number	Package
μPD720113GK-9EU	80-pin plastic TQFP (Fine pitch) (12 × 12)

BLOCK DIAGRAM

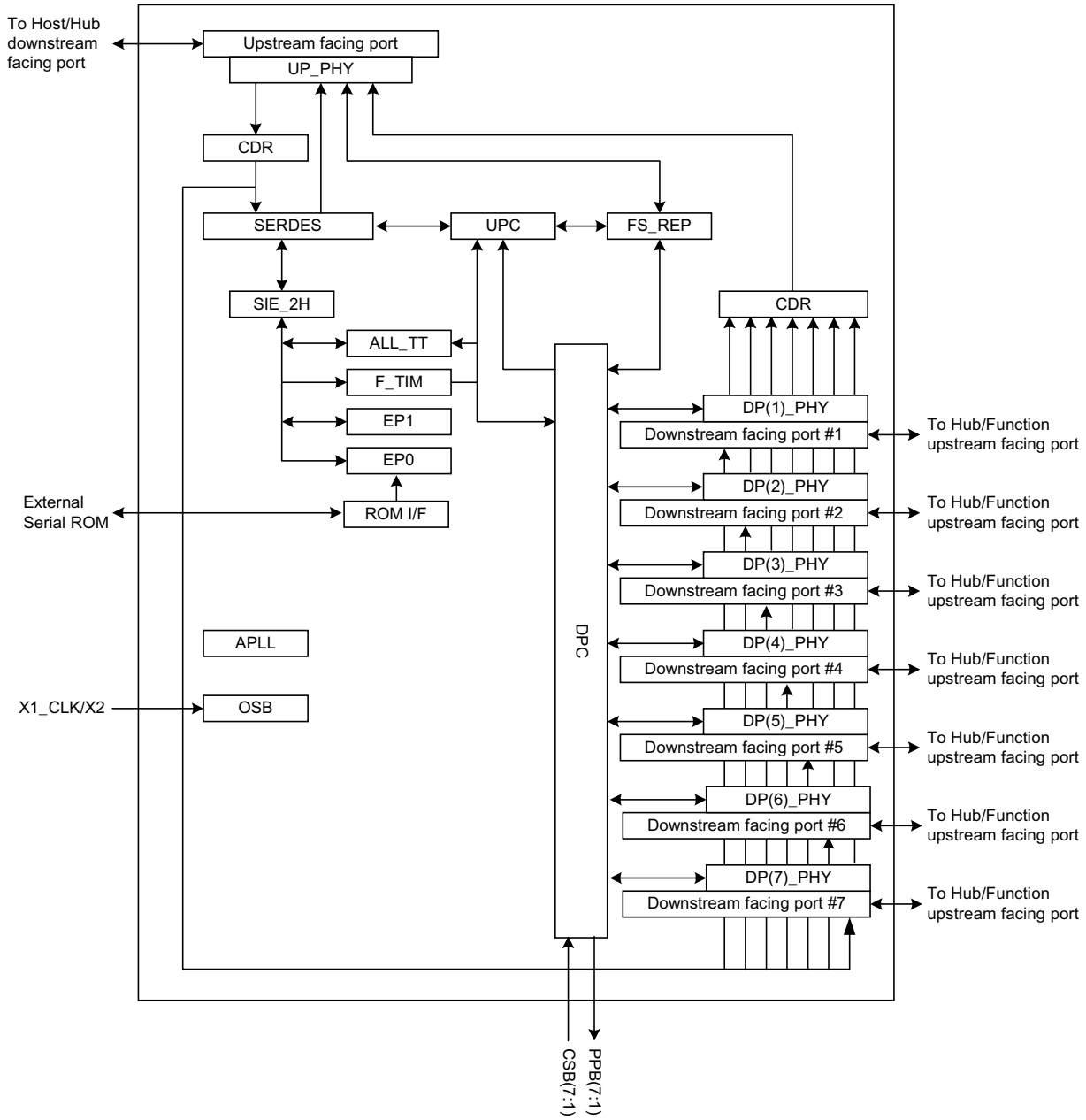

APLL	:	Generates all clocks of Hub.
ALL_TT	:	Translates the high-speed transactions (split transactions) for full/low-speed device to full/low-speed transactions. ALL_TT buffers the data transfer from either upstream or downstream direction. For OUT transaction, ALL_TT buffers data from upstream port and sends it out to the downstream facing ports after speed conversion from high-speed to full/low-speed. For IN transaction, ALL_TT buffers data from downstream ports and sends it out to the upstream facing ports after speed conversion from full/low-speed to high-speed.
CDR	:	Data & clock recovery circuit
DPC	:	Downstream Port Controller handles Port Reset, Enable, Disable, Suspend and Resume
DP(n)_PHY	:	Downstream transceiver supports high-speed (480 Mbps), full-speed (12 Mbps), and low-speed (1.5 Mbps) transaction
EP0	:	Endpoint 0 controller
EP1	:	Endpoint 1 controller
F_TIM (Frame Timer)	:	Manages hub's synchronization by using micro-SOF which is received at upstream port, and generates SOF packet when full/low-speed device is attached to downstream facing port.
FS_REP	:	Full/low-speed repeater is enabled when the μPD720113 are worked at full-speed mode
OSB	:	Oscillator Block
ROM I/F	:	Interface block for external Serial ROM which contains user-defined descriptors
SERDES	:	Serializer and Deserializer
SIE_2H	:	Serial Interface Engine (SIE) controls USB2.0 and 1.1 protocol sequencer.
UP_PHY	:	Upstream Transceiver supports high-speed (480 Mbps), full-speed (12 Mbps) transaction
UPC	:	Upstream Port Controller handles Suspend and Resume

PIN CONFIGURATION (TOP VIEW)

- **80-pin plastic TQFP (Fine pitch) (12 × 12)**

μPD720113GK-9EU

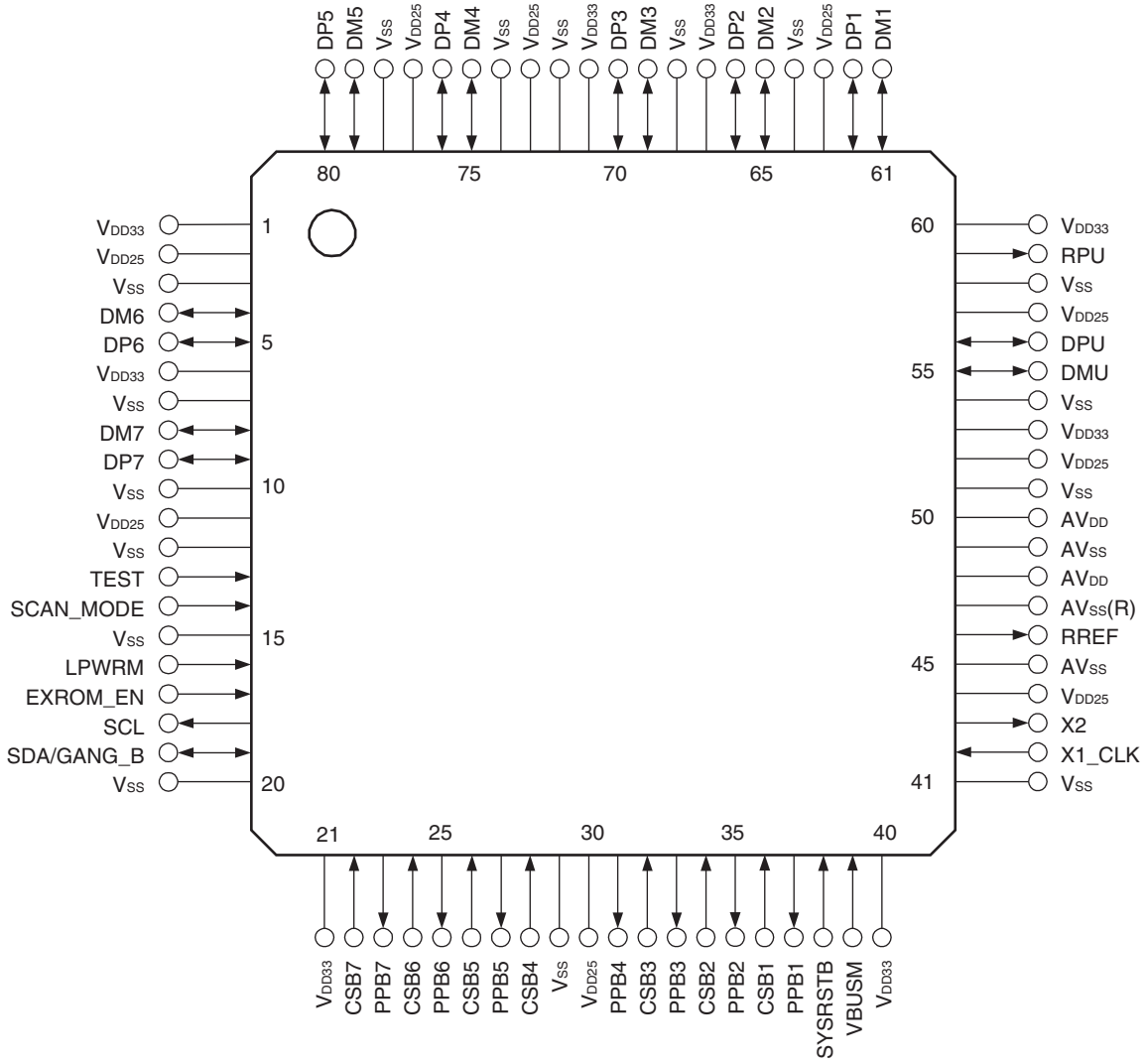

Pin No.	Pin Name	Pin No.	Pin Name	Pin No.	Pin Name	Pin No.	Pin Name
1	V_{DD33}	21	V_{DD33}	41	V_{SS}	61	DM1
2	V_{DD25}	22	CSB7	42	X1_CLK	62	DP1
3	V_{SS}	23	PPB7	43	X2	63	V_{DD25}
4	DM6	24	CSB6	44	V_{DD25}	64	V_{SS}
5	DP6	25	PPB6	45	AV_{SS}	65	DM2
6	V_{DD33}	26	CSB5	46	RREF	66	DP2
7	V_{SS}	27	PPB5	47	AV_{SS}(R)	67	V_{DD33}
8	DM7	28	CSB4	48	AV_{DD}	68	V_{SS}
9	DP7	29	V_{SS}	49	AV_{SS}	69	DM3
10	V_{SS}	30	V_{DD25}	50	AV_{DD}	70	DP3
11	V_{DD25}	31	PPB4	51	V_{SS}	71	V_{DD33}
12	V_{SS}	32	CSB3	52	V_{DD25}	72	V_{SS}
13	TEST	33	PPB3	53	V_{DD33}	73	V_{DD25}
14	SCAN_MODE	34	CSB2	54	V_{SS}	74	V_{SS}
15	V_{SS}	35	PPB2	55	DMU	75	DM4
16	LPWRM	36	CSB1	56	DPU	76	DP4
17	EXROM_EN	37	PPB1	57	V_{DD25}	77	V_{DD25}
18	SCL	38	SYSRSTB	58	V_{SS}	78	V_{SS}
19	SDA/GANG_B	39	VBUSM	59	RPU	79	DM5
20	V_{SS}	40	V_{DD33}	60	V_{DD33}	80	DP5

Remark AV_{SS}(R) should be used to connect RREF through 1 % precision reference resistor of 2.43 kΩ.

1. PIN INFORMATION

Pin Name	I/O	Buffer Type	Active Level	Function
X1_CLK	I	2.5 V Input		Crystal oscillator in or clock input
X2	O	2.5 V Output		Oscillator out
SYSRSTB	I	5 V tolerant Schmitt Input	Low	Asynchronous chip reset
RPU	A (O)	USB Pull-up control		External 1.5 kΩ pull-up resistor control
DP(7:1)	I/O	USB D+ signal I/O		USB's downstream facing port D+ signal
DM(7:1)	I/O	USB D– signal I/O		USB's downstream facing port D– signal
DPU	I/O	USB D+ signal I/O		USB's upstream facing port D+ signal
DMU	I/O	USB D– signal I/O		USB's upstream facing port D– signal
LPWRM	I	3.3 V Schmitt Input		Local power monitor
RREF	A (O)	Analog		Reference resistor
CSB(7:1)	I	5 V tolerant Input	Low	Port's over-current status input
PPB(7:1)	O	5 V tolerant N-ch open drain	Low	Port's power supply control output
VBUSM	I	5 V tolerant Schmitt input		V_{BUS} monitor
SCL	O	3.3 V Output		External serial ROM clock out
SDA/GANG_B	I/O	3.3 V Schmitt I/O		External serial ROM data IO or power management mode select
EXROM_EN	I	3.3 V Schmitt Input		External serial ROM input enable
TEST	I	3.3 V Input		Test signal
SCAN_MODE	I	3.3 V Input		Test signal
V_{DD33}				3.3 V V_{DD}
V_{DD25}				2.5 V V_{DD}
AV_{DD}				2.5 V V_{DD} for analog circuit
V_{SS}				V_{SS}
AV_{SS}				V_{SS} for analog circuit
AV_{SS}(R)				V_{SS} for reference resistor

Remark "5 V tolerant" means that the buffer is 3 V buffer with 5 V tolerant circuit.

2. ELECTRICAL SPECIFICATIONS

2.1 Buffer List

- 2.5 V Oscillator interface
  X1_CLK, X2
- 5 V Schmitt input buffer
  SYSRSTB, CSB(7:1), VBUSM
- 3.3 V Schmitt input buffer
  LPWRM
- 3.3 V input buffer
  EXROM_EN, TEST, SCAN_MODE
- 3.3 V I_{OL} = 3 mA bi-directional Schmitt input buffer with input enable (OR-type)
  SDA/GANG_B
- 3.3 V I_{OL} = 3 mA output buffer
  SCL
- 5 V I_{OL} = 12 mA N-ch open drain buffer
  PPB(7:1)
- USB2.0 interface
  RPU, DPU, DMU, DP(7:1), DM(7:1), RREF

Above, “5 V” refers to a 3 V buffer that is 5 V tolerant (has 5 V maximum voltage). Therefore, it is possible to have a 5 V connection for an external bus, but the output level will be only up to 3 V, which is the V_{DD33} voltage.

2.2 Terminology

Terms Used in Absolute Maximum Ratings

Parameter	Symbol	Meaning
Power supply voltage	V_{DD33} V_{DD25} AV_{DD}	Indicates voltage range within which damage or reduced reliability will not result when power is applied to a V_{DD} pin.
Input voltage	V_I	Indicates voltage range within which damage or reduced reliability will not result when power is applied to an input pin.
Output voltage	V_O	Indicates voltage range within which damage or reduced reliability will not result when power is applied to an output pin.
Output current	I_O	Indicates absolute tolerance values for DC current to prevent damage or reduced reliability when a current flow out of or into an output pin.
Operating temperature	T_A	Indicates the ambient temperature range for normal logic operations.
Storage temperature	T_{stg}	Indicates the element temperature range within which damage or reduced reliability will not result while no voltage or current are applied to the device.

Terms Used in Recommended Operating Range

Parameter	Symbol	Meaning
Power supply voltage	V_{DD33} V_{DD25} AV_{DD}	Indicates the voltage range for normal logic operations occur when V_{SS} = 0 V.
High-level input voltage	V_{IH}	Indicates the voltage, which is applied to the input pins of the device, is the voltage indicates that the high level states for normal operation of the input buffer. * If a voltage that is equal to or greater than the “MIN.” value is applied, the input voltage is guaranteed as high level voltage.
Low-level input voltage	V_{IL}	Indicates the voltage, which is applied to the input pins of the device, is the voltage indicates that the low level states for normal operation of the input buffer. * If a voltage that is equal to or lesser than the “MAX.” value is applied, the input voltage is guaranteed as low level voltage.
Hysteresis voltage	V_H	Indicates the differential between the positive trigger voltage and the negative trigger voltage.
Input rise time	t_{ri}	Indicates allowable input rise time to input pins. Input rise time is transition time from $0.1 \times V_{DD}$ to $0.9 \times V_{DD}$.
Input fall time	t_{fi}	Indicates allowable input fall time to input pins. Input fall time is transition time from $0.9 \times V_{DD}$ to $0.1 \times V_{DD}$.

Terms Used in DC Characteristics

Parameter	Symbol	Meaning
Off-state output leakage current	I_{OZ}	Indicates the current that flows from the power supply pins when the rated power supply voltage is applied when a 3-state output has high impedance.
Output short circuit current	I_{OS}	Indicates the current that flows when the output pin is shorted (to GND pins) when output is at high-level.
Input leakage current	I_I	Indicates the current that flows when the input voltage is supplied to the input pin.
Low-level output current	I_{OL}	Indicates the current that flows to the output pins when the rated low-level output voltage is being applied.
High-level output current	I_{OH}	Indicates the current that flows from the output pins when the rated high-level output voltage is being applied.

2.3 Electrical Specifications

Absolute Maximum Ratings

Parameter	Symbol	Condition	Rating	Unit
Power supply voltage	V_{DD33}		−0.5 to +4.6	V
	V_{DD25}		−0.5 to +3.6	V
	AV_{DD}		−0.5 to +3.6	V
Input/output voltage	V_I/V_O			
2.5V input/output voltage		2.3 V ≤ V_{DD25} ≤ 2.7 V $V_I/V_O < V_{DD25}$ + 0.9 V	−0.5 to +3.6	V
3.3 V input/output voltage		3.0 V ≤ V_{DD33} ≤ 3.6 V $V_I/V_O < V_{DD33}$ + 1.0 V	−0.5 to +4.6	V
5 V input/out voltage		3.0 V ≤ V_{DD33} ≤ 3.6 V $V_I/V_O < V_{DD33}$ + 3.0 V	−0.5 to +6.6	V
Output current	I_O	I_{OL} = 3 mA I_{OL} = 6 mA I_{OL} = 12 mA	10 20 40	mA mA mA
Operating temperature	T_A		0 to +70	°C
Storage temperature	T_{stg}		−65 to +150	°C

Caution Product quality may suffer if the absolute maximum rating is exceeded even momentarily for any parameters. That is, the absolute maximum ratings are rated values at which the product is on the verge of suffering physical damage, and therefore the product must be used under conditions that ensure that the absolute maximum ratings are not exceeded.
The ratings and conditions indicated for DC characteristics and AC characteristics represent the quality assurance range during normal operation.

Recommended Operating Ranges

Parameter	Symbol	Condition	MIN.	TYP.	MAX.	Unit
Operating voltage	V_{DD33}	3.3 V for V_{DD33} pins	3.14	3.30	3.46	V
	V_{DD25}	2.5 V for V_{DD25} pins	2.3	2.5	2.7	V
	AV_{DD}	2.5 V for AV_{DD} pins	2.3	2.5	2.7	V
High-level input voltage	V_{IH}					
2.5 V High-level input voltage			1.7		V_{DD25}	
3.3 V High-level input voltage			2.0		V_{DD33}	V
5.0 V High-level input voltage			2.0		5.5	V
Low-level input voltage	V_{IL}					
2.5 V Low-level input voltage			0		0.7	
3.3 V Low-level input voltage			0		0.8	V
5.0 V Low-level input voltage			0		0.8	V
Hysteresis voltage	V_H					
5 V Hysteresis voltage			0.3		1.5	V
3.3 V Hysteresis voltage			0.2		1.0	V
Input rise time for SYSRSTB	t_{rst}				10	ms
Input rise time	t_{ri}					
Normal buffer			0		200	ns
Schmitt buffer			0		10	ms
Input fall time	t_{fi}					
Normal buffer			0		200	ns
Schmitt buffer			0		10	ms

Two power supply rails limitation.

The μPD720113 has two power supply rails (2.5 V, 3.3 V). The system will require the time when power supply rail is stable at V_{DD} level. And, there will be difference between the time of V_{DD25} and V_{DD33}. The μPD720113 requires that V_{DD25} should be stable before V_{DD33} becomes stable. At any case, the system must ensure that the absolute maximum ratings for V_I /V_O are not exceeded. System reset signaling should be asserted more than specified time after both V_{DD25} and V_{DD33} are stable.

DC Characteristics

Parameter	Symbol	Condition	MIN.	MAX.	Unit
Off-state output leakage current	I_{OZ}	$V_O = V_{DD33}$, V_{DD25} or V_{SS}		±10	μA
Output short circuit current	I_{OS} Note			−250	mA
Low-level output current	I_{OL}				
3.3 V low-level output current		V_{OL} = 0.4 V	3		mA
3.3 V low-level output current		V_{OL} = 0.4 V	6		mA
5.0 V low-level output current		V_{OL} = 0.4 V	12		mA
High-level output current	I_{OH}				
3.3 V high-level output current		V_{OH} = 2.4 V	−3		mA
3.3 V high-level output current		V_{OH} = 2.4 V	−6		mA
5.0 V high-level output current		V_{OH} = 2.4 V	−2		mA
Input leakage current	I_I				
3.3 V buffer		$V_I = V_{DD}$ or V_{SS}		±10	μA
5.0 V buffer		$V_I = V_{DD}$ or V_{SS}		±10	μA

Note The output short circuit time is measured at one second or less and is tested with only one pin on the LSI.

USB Interface Block

Parameter	Symbol	Conditions	MIN	MAX	Unit
Output pin impedance	Z_{HSDRV}	Includes R_S resistor	40.5	49.5	Ω
Bus pull-up resistor on upstream facing port	R_{PU}		1.425	1.575	kΩ
Bus pull-up resistor on downstream facing port	R_{PD}		14.25	15.75	kΩ
Termination voltage for upstream facing port pullup (full-speed)	V_{TERM}		3.0	3.6	V
Input Levels for Low-/full-speed:					
High-level input voltage (drive)	V_{IH}		2.0		V
High-level input voltage (floating)	V_{IHZ}		2.7	3.6	V
Low-level input voltage	V_{IL}			0.8	V
Differential input sensitivity	V_{DI}	$\lvert(D+) - (D-)\rvert$	0.2		V
Differential common mode range	V_{CM}	Includes V_{DI} range	0.8	2.5	V
Output Levels for Low-/full-speed:					
High-level output voltage	V_{OH}	R_L of 14.25 kΩ to GND	2.8	3.6	V
Low-level output voltage	V_{OL}	R_L of 1.425 kΩ to 3.6 V	0.0	0.3	V
SE1	V_{OSE1}		0.8		V
Output signal crossover point voltage	V_{CRS}		1.3	2.0	V
Input Levels for High-speed:					
High-speed squelch detection threshold (differential signal)	V_{HSSQ}		100	150	mV
High-speed disconnect detection threshold (differential signal)	V_{HSDSC}		525	625	mV
High-speed data signaling common mode voltage range	V_{HSCM}		–50	+500	mV
High-speed differential input signaling levels	See Figure 2-4.				
Output Levels for High-speed:					
High-speed idle state	V_{HSOI}		–10.0	+10	mV
High-speed data signaling high	V_{HSOH}		360	440	mV
High-speed data signaling low	V_{HSOL}		–10.0	+10	mV
Chirp J level (different signal)	V_{CHIRPJ}		700	1100	mV
Chirp K level (different signal)	V_{CHIRPK}		–900	–500	mV

Figure 2-1. Differential Input Sensitivity Range for Low-/full-speed

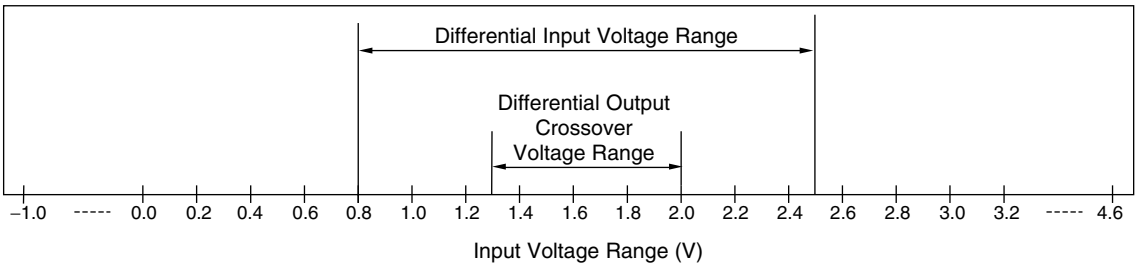

Figure 2-2. Full-speed Buffer V_{OH}/I_{OH} Characteristics for High-speed Capable Transceiver

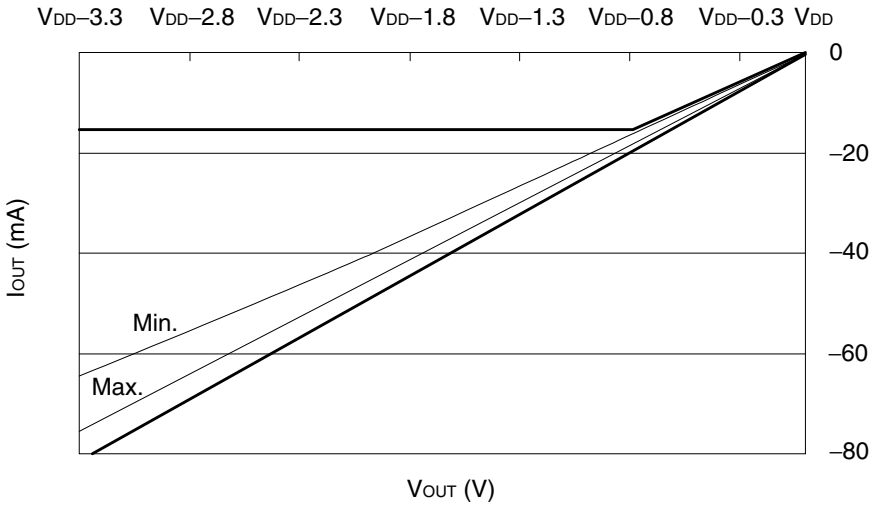

Figure 2-3. Full-speed Buffer V_{OL}/I_{OL} Characteristics for High-speed Capable Transceiver

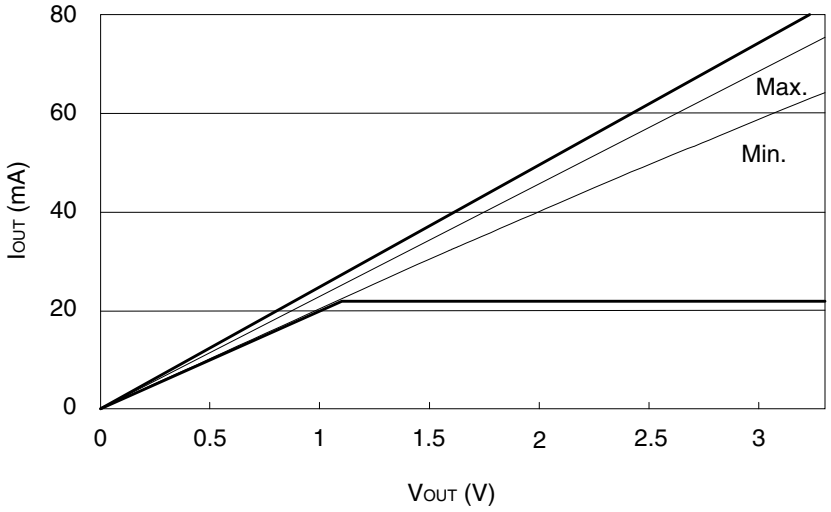

Figure 2-4. Receiver Sensitivity for Transceiver at DP/DM

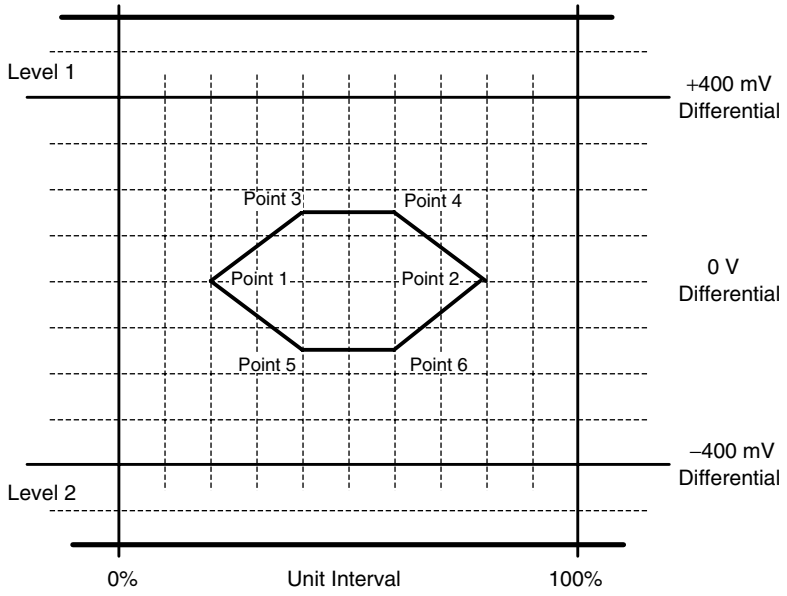

Figure 2-5. Receiver Measurement Fixtures

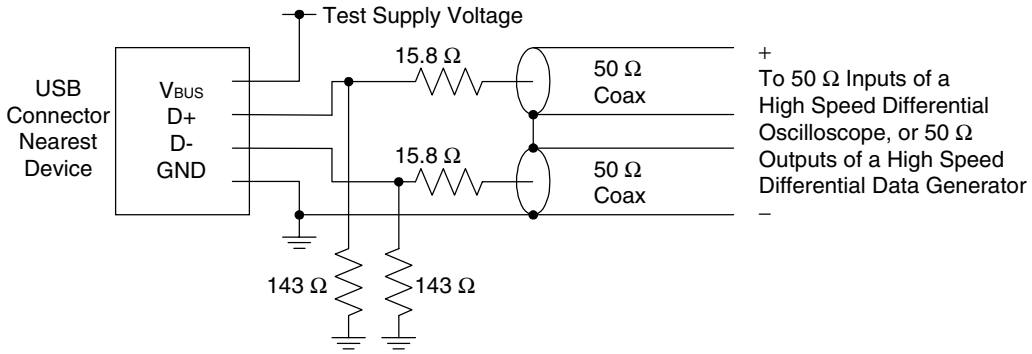

Power Consumption

Parameter	Symbol	Condition	TYP.	Unit
Power Consumption	P_{W-0}	The power consumption under the state without suspend. All the ports do not connect to any function.[Note]		
		Hub controller is operating at full-speed mode.	44	mA (2.5 V)
			2.2	mA (3.3 V)
		Hub controller is operating at high-speed mode.	84	mA (2.5 V)
			23	mA (3.3 V)
	P_{W-5}	The power consumption under the state without suspend. The number of active ports is 2.		
		Hub controller is operating at full-speed mode.	44	mA (2.5 V)
			8.9	mA (3.3 V)
		Hub controller is operating at high-speed mode.	138	mA (2.5 V)
			85	mA (3.3 V)
	P_{W-6}	The power consumption under the state without suspend. The number of active ports is 3.		
		Hub controller is operating at full-speed mode.	44	mA (2.5 V)
			10	mA (3.3 V)
		Hub controller is operating at high-speed mode.	148	mA (2.5 V)
			98	mA (3.3 V)
	P_{W-7}	The power consumption under the state without suspend. The number of active ports is 4.		
		Hub controller is operating at full-speed mode.	44	mA (2.5 V)
			12	mA (3.3 V)
		Hub controller is operating at high-speed mode.	158	mA (2.5 V)
			111	mA (3.3 V)
	P_{W_S}	The power consumption under suspend state. The internal clock is stopped.	0.68	mA (2.5 V)
			0.24	mA (3.3 V)

Note When any device is not connected to all the ports, the power consumption does not depend on the number of active ports.

System Clock Ratings

Parameter	Symbol	Condition	MIN.	TYP.	MAX.	Unit
Clock frequency	f_{CLK}	X'tal	–500 ppm	30	+500 ppm	MHz
		Oscillator block	–500 ppm	30	+500 ppm	MHz
Clock Duty cycle	t_{DUTY}		40	50	60	%

Remarks 1. Mandatory accuracy of clock frequency is ± 100 ppm.

2. Required accuracy of X'tal or oscillator block is including initial frequency accuracy, the spread of X'tal capacitor loading, supply voltage, temperature, and aging, etc.

AC Characteristics (V_{DD} = 3.14 to 3.46 V, T_A = 0 to +70°C)

System Reset Timing

Parameter	Symbol	Conditions	MIN.	MAX.	Unit
Reset active time (Figure 2-6)	t_{rst}		5		μs

Figure 2-6. System Reset Timing

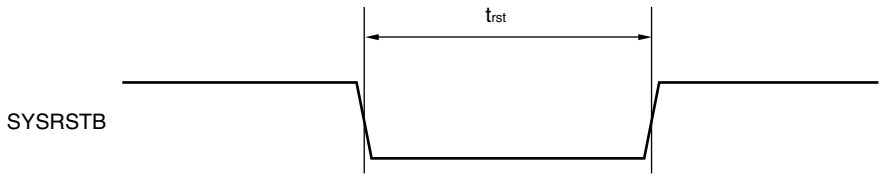

Over-current Response Timing

Parameter	Symbol	Condition	MIN.	TYP.	MAX.	Unit
Over-current response time from CSB low to PPB high (Figure 2-7)	t_{OC}		500		625	μs

Figure 2-7. Over-current Response Timing

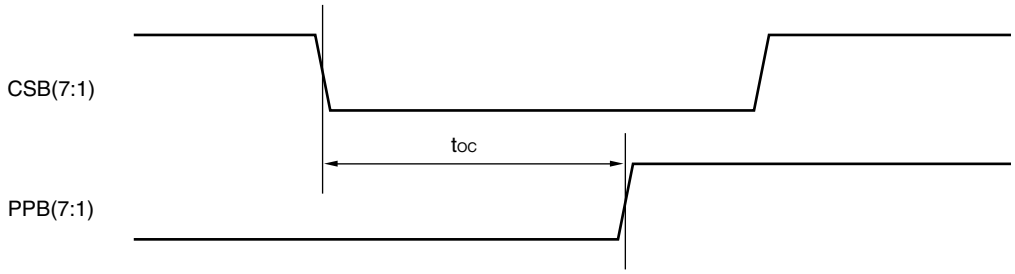

Figure 2-8. CSB/PPB Timing

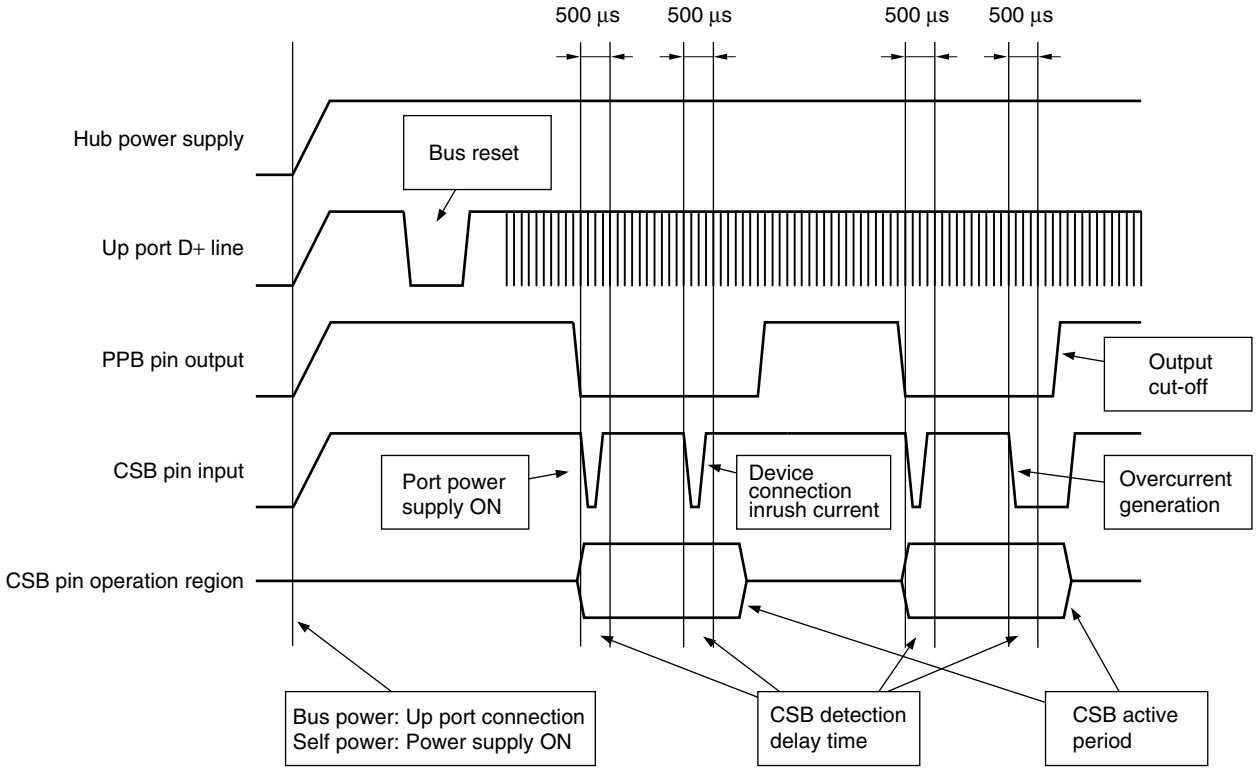

Remark The active period of the CSB pin is in effect only when the PPB pin is ON.
There is a delay time of approximately 500 μs duration at the CSB pin.

External Serial ROM Timing

Parameter	Symbol	Condition	MIN.	TYP.	MAX.	Unit
Clock frequency	f_{SCL}			94.6	100	kHz
Clock pulse width low	t_{LOW}		4700			ns
Clock pulse width high	t_{HIGH}		4000			ns
Clock low to data out valid	t_{AA}		100		3500	ns
Time the bus must be free before a new transmission can start	t_{BUF}		4700			ns
Start hold time	$t_{HD.STA}$		4000			ns
Start setup time	$t_{SU.STA}$		4700			ns
Data in hold time	$t_{HD.DTA}$		0			ns
Data in setup time	$t_{SU.DTA}$		250			ns
Stop setup time	$t_{SU.STO}$		4700			ns
Data out hold time	t_{DH}		300			ns
Write cycle time	t_{WR}				15	ms

Figure 2-9. External Serial ROM Bus Timing

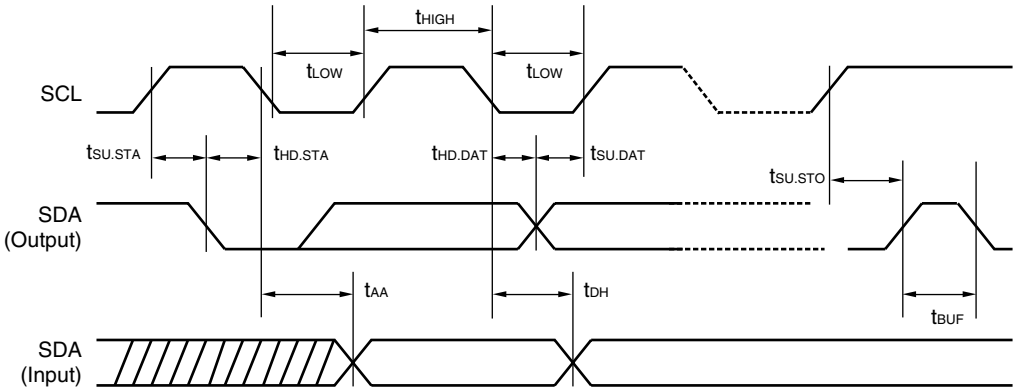

Figure 2-10. External Serial ROM Write Cycle Timing

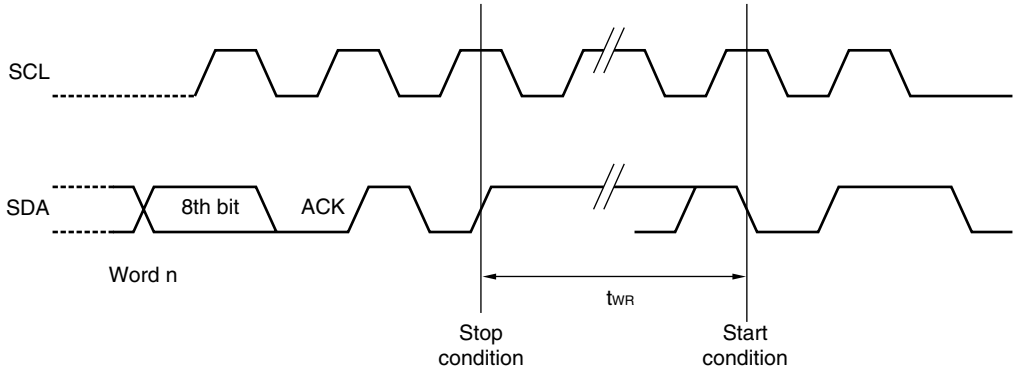

USB Interface Block

(1/4)

Parameter	Symbol	Conditions	MIN.	MAX.	Unit
Low-speed Electrical Characteristics					
Rise time (10% to 90%)	t_{LR}	C_L = 200 pF to 600 pF	75	300	ns
Fall time (90% to 10%)	t_{LF}	C_L = 200 pF to 600 pF	75	300	ns
Differential rise and fall time matching	t_{LRFM}	(t_{LR}/t_{LF}) Note	80	125	%
Low-speed data rate	$t_{LDRATHS}$	Average bit rate	1.49925	1.50075	Mbps
Downstream facing port source jitter total (including frequency tolerance) (Figure 2-15):					
To next transition	t_{DDJ1}		–25	+25	ns
For paired transitions	t_{DDJ2}		–14	+14	ns
Downstream facing port differential receiver jitter total (including frequency tolerance) (Figure 2-17):					
To next transition	t_{UJR1}		–152	+152	ns
For paired transitions	t_{UJR2}		–200	+200	ns
Source SE0 interval of EOP (Figure 2-16)	t_{LEOPT}		1.25	1.5	μs
Receiver SE0 interval of EOP (Figure 2-16)	t_{LEOPR}		670		ns
Width of SE0 interval during differential transition	t_{LST}			210	ns
Hub differential data delay (Figure 2-13)	t_{LHDD}			300	ns
Hub differential driver jitter (including cable) (Figure 2-13):					
Downstream facing port					
To next transition	t_{LDHJ1}		–45	+45	ns
For paired transitions	t_{LDHJ2}		–15	+15	ns
Upstream facing port					
To next transition	t_{LUHJ1}		–45	+45	ns
For paired transitions	t_{LUHJ2}		–45	+45	ns
Data bit width distortion after SOP (Figure 2-13)	t_{LSOP}		–60	+60	ns
Hub EOP delay relative to t_{HDD} (Figure 2-14)	t_{LEOPD}		0	200	ns
Hub EOP output width skew (Figure 2-14)	t_{LHESK}		–300	+300	ns
Full-speed Electrical Characteristics					
Rise time (10% to 90%)	t_{FR}	C_L = 50 pF, R_S = 36 Ω	4	20	ns
Fall time (90% to 10%)	t_{FF}	C_L = 50 pF, R_S = 36 Ω	4	20	ns
Differential rise and fall time matching	t_{FRFM}	(t_{FR}/t_{FF})	90	111.11	%
Full-speed data rate	$t_{FDRATHS}$	Average bit rate	11.9940	12.0060	Mbps
Frame interval	t_{FRAME}		0.9995	1.0005	ms

Note Excluding the first transition from the Idle state.

(2/4)

Parameter	Symbol	Conditions	MIN.	MAX.	Unit
Full-speed Electrical Characteristics (Continued)					
Consecutive frame interval jitter	t_{RFI}	No clock adjustment		42	ns
Source jitter total (including frequency tolerance) (Figure 2-15): To next transition For paired transitions	 t_{DJ1} t_{DJ2}	**Note**	 –3.5 –4.0	 +3.5 +4.0	 ns ns
Source jitter for differential transition to SE0 transition (Figure 2-16)	t_{FDEOP}		–2	+5	ns
Receiver jitter (Figure 2-17): To Next Transition For Paired Transitions	 t_{JR1} t_{JR2}		 –18.5 –9	 +18.5 +9	 ns ns
Source SE0 interval of EOP (Figure 2-16)	t_{FEOPT}		160	175	ns
Receiver SE0 interval of EOP (Figure 2-16)	t_{FEOPR}		82		ns
Width of SE0 interval during differential transition	t_{FST}			14	ns
Hub differential data delay (Figure 2-13) (with cable) (without cable)	 t_{HDD1} t_{HDD2}			 70 44	 ns ns
Hub differential driver jitter (including cable) (Figure 2-13): To next transition For paired transitions	 t_{HDJ1} t_{HDJ2}		 –3 –1	 +3 +1	 ns ns
Data bit width distortion after SOP (Figure 2-13)	t_{FSOP}		–5	+5	ns
Hub EOP delay relative to t_{HDD} (Figure 2-14)	t_{FEOPD}		0	15	ns
Hub EOP output width skew (Figure 2-14)	t_{FHESK}		–15	+15	ns
High-speed Electrical Characteristics					
Rise time (10% to 90%)	t_{HSR}		500		ps
Fall time (90% to 10%)	t_{HSF}		500		ps
Driver waveform	See Figure 2-11.				
High-speed data rate	t_{HSDRAT}		479.760	480.240	Mbps
Microframe interval	t_{HSFRAM}		124.9375	125.0625	μs
Consecutive microframe interval difference	t_{HSRFI}			4 high-speed	Bit times
Data source jitter	See Figure 2-11.				
Receiver jitter tolerance	See Figure 2-4.				
Hub data delay (without cable)	t_{HSHDD}			36 high-speed+4 ns	Bit times
Hub data jitter	See Figure 2-4, Figure 2-11.				
Hub delay variation range	t_{HSHDV}			5 high-speed	Bit times

Note Excluding the first transition from the Idle state.

(3/4)

Parameter	Symbol	Conditions	MIN.	MAX.	Unit
Hub Event Timings					
Time to detect a downstream facing port connect event (Figure 2-19): Awake hub Suspended hub	t_{DCNN}		 2.5 2.5	 2000 12000	 μs μs
Time to detect a disconnect event at a hub's downstream facing port (Figure 2-18)	t_{DDIS}		2.0	2.5	μs
Duration of driving resume to a downstream port (only from a controlling hub)	t_{DRSMDN}		20		ms
Time from detecting downstream resume to rebroadcast	t_{URSM}			1.0	ms
Duration of driving reset to a downstream facing port (Figure 2-20)	t_{DRST}	Only for a SetPortFeature (PORT_RESET) request	10	20	ms
Time to detect a long K from upstream	t_{URLK}		2.5	100	μs
Time to detect a long SE0 from upstream	t_{URLSE0}		2.5	10000	μs
Duration of repeating SE0 upstream (for low-/full-speed repeater)	t_{URPSE0}			23	FS Bit times
Inter-packet delay (for high-speed) of packets traveling in same direction	$t_{HSIPDSD}$		88		Bit times
Inter-packet delay (for high-speed) of packets traveling in opposite direction	$t_{HSIPDOD}$		8		Bit times
Inter-packet delay for device/root hub response with detachable cable for high-speed	$t_{HSRSPIPD1}$			192	Bit times
Time of which a Chirp J or Chirp K must be continuously detected (filtered) by hub or device during Reset handshake	t_{FILT}		2.5		μs
Time after end of device Chirp K by which hub must start driving first Chirp K in the hub's chirp sequence	t_{WTDCH}			100	μs
Time for which each individual Chirp J or Chirp K in the chirp sequence is driven downstream by hub during reset	t_{DCHBIT}		40	60	μs
Time before end of reset by which a hub must end its downstream chirp sequence	t_{DCHSE0}		100	500	μs
Time from internal power good to device pulling D+ beyond V_{IHZ} (Figure 2-20)	t_{SIGATT}			100	ms
Debounce interval provided by USB system software after attach (Figure 2-20)	t_{ATTDB}			100	ms
Maximum duration of suspend averaging interval	$t_{SUSAVGI}$			1	s
Period of idle bus before device can initiate resume	t_{WTRSM}		5		ms
Duration of driving resume upstream	t_{DRSMUP}		1	15	ms

(4/4)

Parameter	Symbol	Conditions	MIN.	MAX.	Unit
Hub Event Timings (Continued)					
Resume recovery time	t_{RSMRCY}	Remote-wakeup is enabled	10		ms
Time to detect a reset from upstream for non high-speed capable devices	t_{DETRST}		2.5	10000	μs
Reset recovery time (Figure 2-20)	t_{RSTRCY}			10	ms
Inter-packet delay for full-speed	t_{IPD}		2		Bit times
Inter-packet delay for device response with detachable cable for full-speed	$t_{RSPIPD1}$			6.5	Bit times
SetAddress() completion time	$t_{DSETADDR}$			50	ms
Time to complete standard request with no data	$t_{DRQCMPLTND}$			50	ms
Time to deliver first and subsequent (except last) data for standard request	$t_{DRETDATA1}$			500	ms
Time to deliver last data for standard request	$t_{DRETDATAN}$			50	ms
Time for which a suspended hub will see a continuous SE0 on upstream before beginning the high-speed detection handshake	$t_{FILTSE0}$		2.5		μs
Time a hub operating in non-suspended full-speed will wait after start of SE0 on upstream before beginning the high-speed detection handshake	$t_{WTRSTFS}$		2.5	3000	ms
Time a hub operating in high-speed will wait after start of SE0 on upstream before reverting to full-speed	t_{WTREV}		3.0	3.125	ms
Time a hub will wait after reverting to full-speed before sampling the bus state on upstream and beginning the high-speed will wait after start of SE0 on upstream before reverting to full-speed	$t_{WTRSTHS}$		100	875	ms
Minimum duration of a Chirp K on upstream from a hub within the reset protocol	t_{UCH}		1.0		ms
Time after start of SE0 on upstream by which a hub will complete its Chirp K within the reset protocol	t_{UCHEND}			7.0	ms
Time between detection of downstream chip and entering high-speed state	t_{WTHS}			500	μs
Time after end of upstream Chirp at which hub reverts to full-speed default state if no downstream Chirp is detected	t_{WTFS}		1.0	2.5	ms

Figure 2-11. Transmit Waveform for Transceiver at DP/DM

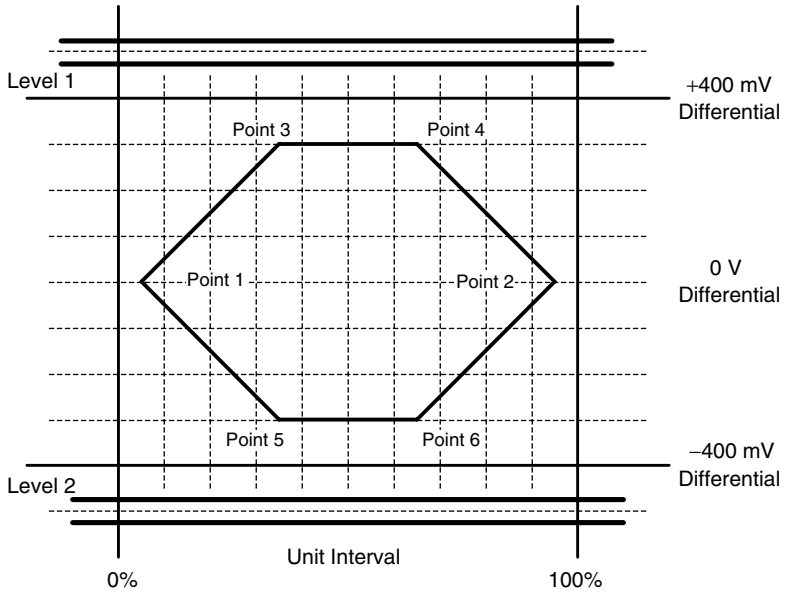

Figure 2-12. Transmitter Measurement Fixtures

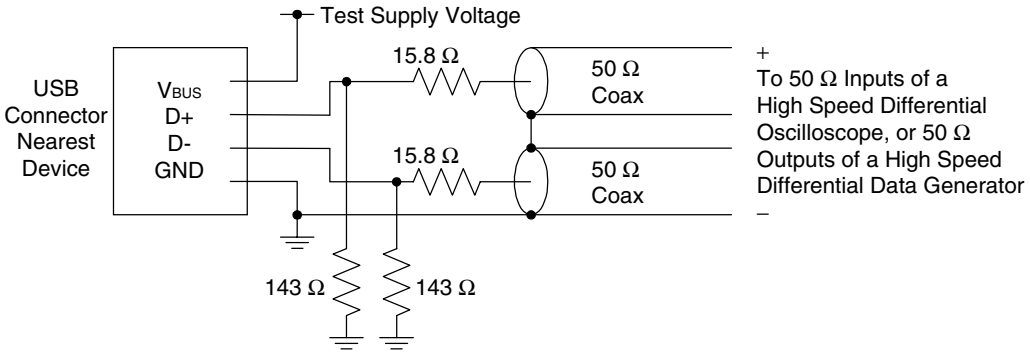

Timing Diagram

Figure 2-13. Hub Differential Delay, Differential Jitter, and SOP Distortion

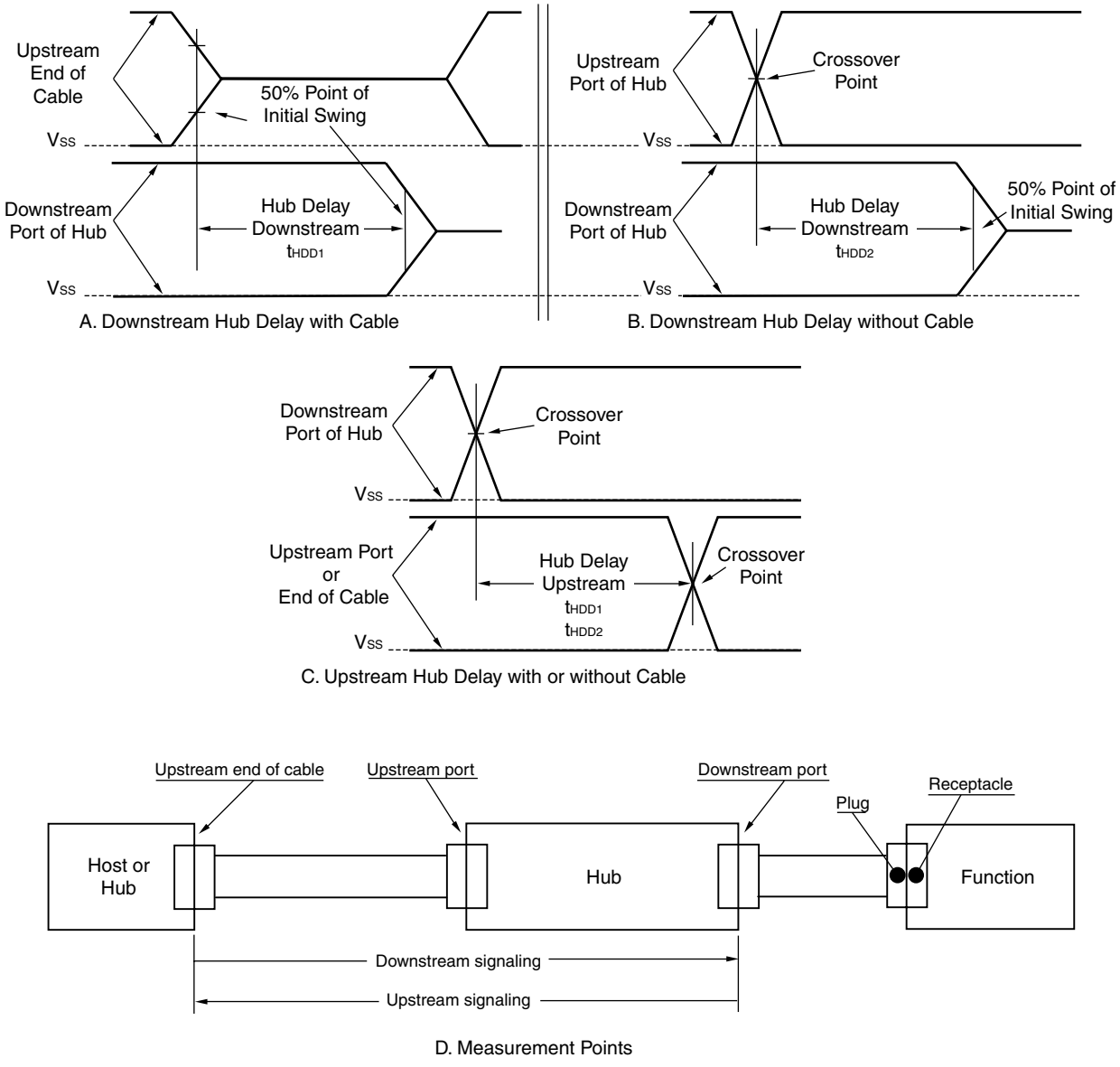

D. Measurement Points

Hub Differential Jitter:

$t_{HDJ1} = t_{HDDx}(J) - t_{HDDx}(K)$ or $t_{HDDx}(K) - t_{HDDx}(J)$ Consecutive Transitions

$t_{HDJ2} = t_{HDDx}(J) - t_{HDDx}(J)$ or $t_{HDDx}(K) - t_{HDDx}(K)$ Paired Transitions

Bit after SOP Width Distortion (same as data jitter for SOP and next J transition):

$t_{FSOP} = t_{HDDx}(\text{next J}) - t_{HDDx}(\text{SOP})$

Low-speed timings are determined in the same way for:

t_{LHDD}, t_{LDHJ1}, t_{LDJH2}, t_{LUHJ1}, t_{LUJH2}, and t_{LSOP}

Figure 2-14. Hub EOP Delay and EOP Skew

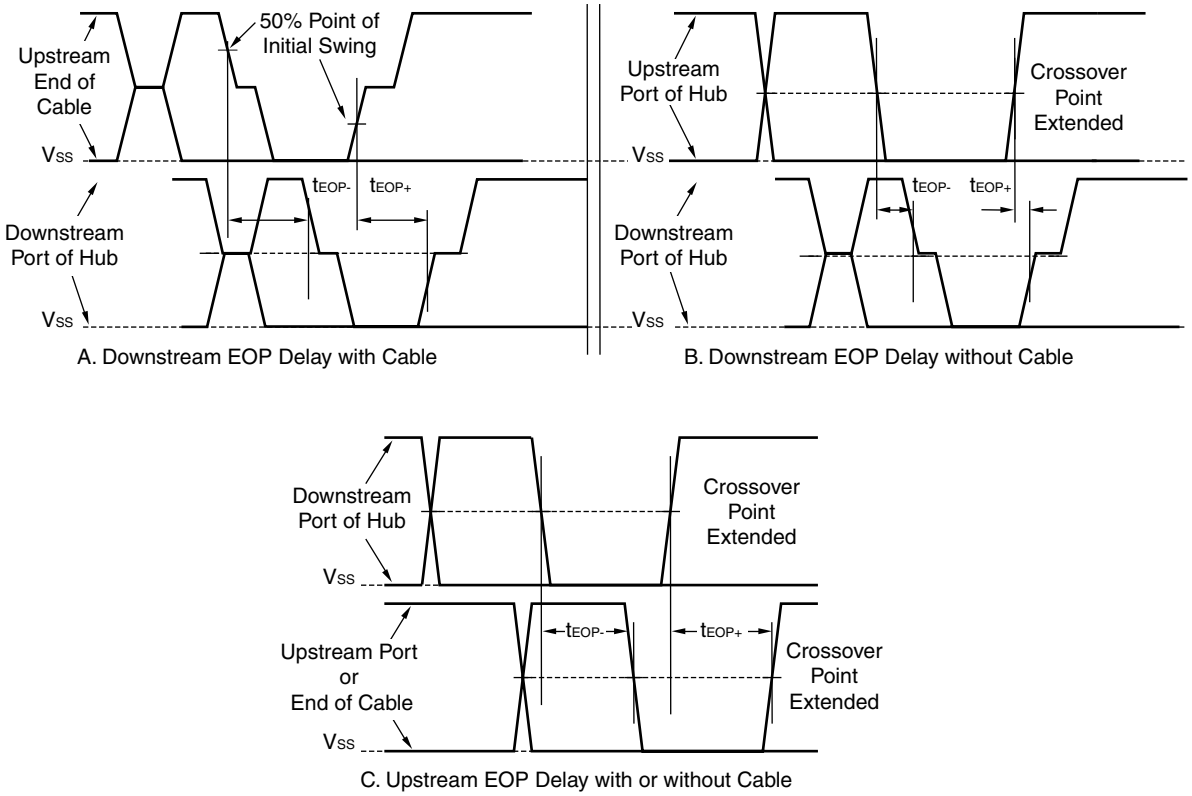

EOP Delay:

$t_{FEOPD} = t_{EOPy} - t_{HDDx}$

(t_{EOPy} means that this equation applies to t_{EOP-} and t_{EOP+})

EOP Skew:

$t_{FHESK} = t_{EOP+} - t_{EOP-}$

Low-speed timings are determined in the same way for:

t_{LEOPD} and t_{LHESK}

Figure 2-15. USB Differential Data Jitter for Low-/full-speed

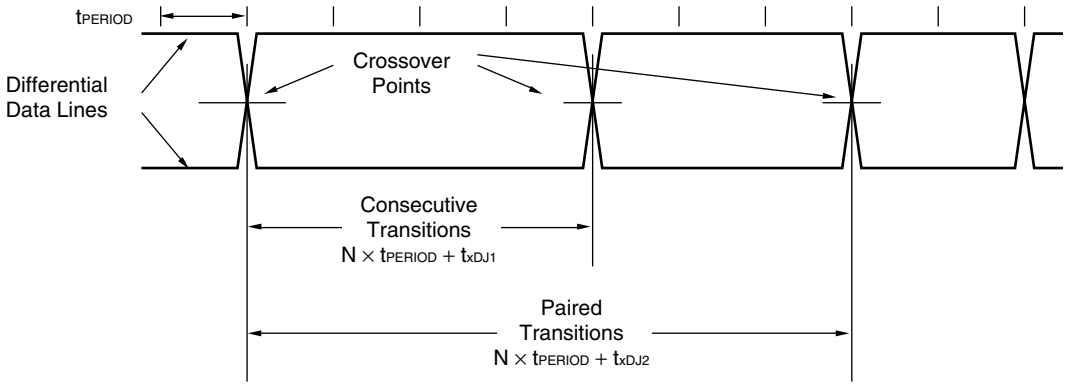

Figure 2-16. USB Differential-to-EOP Transition Skew and EOP Width for Low-/full-speed

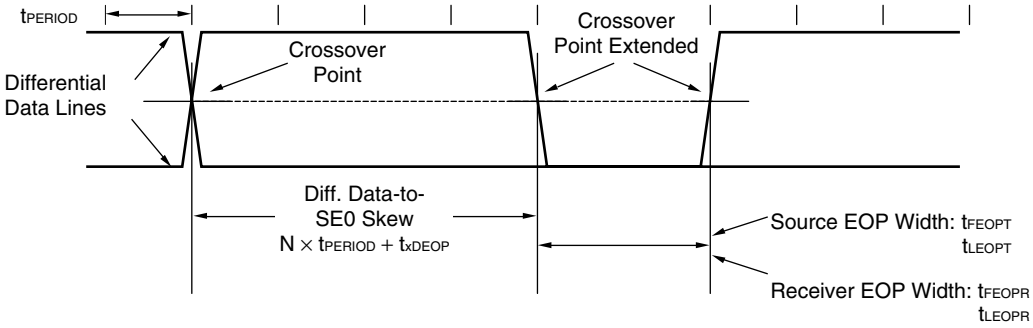

Figure 2-17. USB Receiver Jitter Tolerance for Low-/full-speed

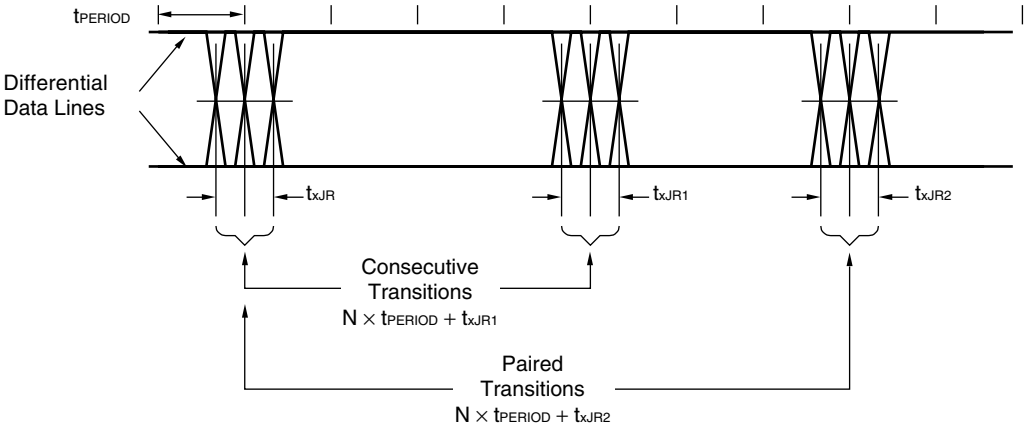

Figure 2-18. Low-/full-speed Disconnect Detection

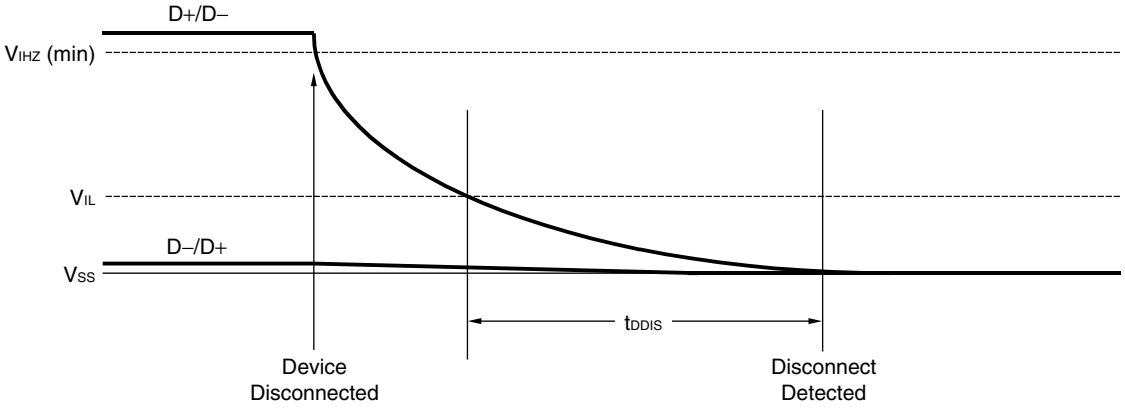

Figure 2-19. Full-/high-speed Device Connect Detection

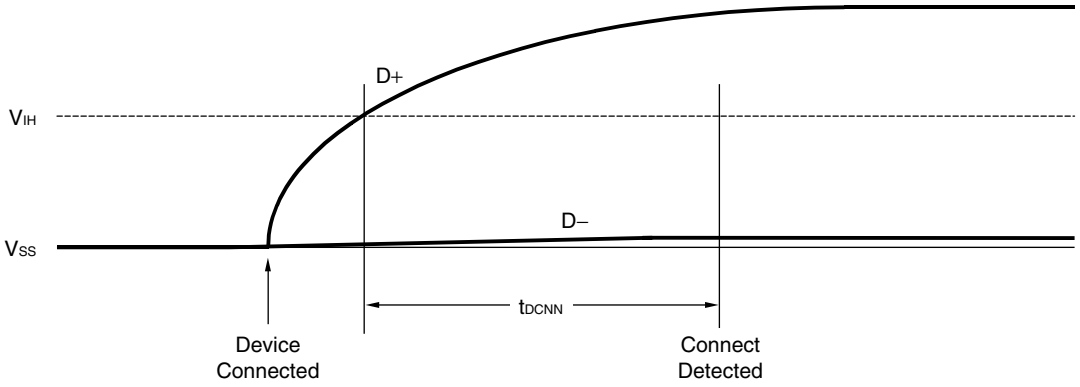

Figure 2-20. Power-on and Connection Events Timing

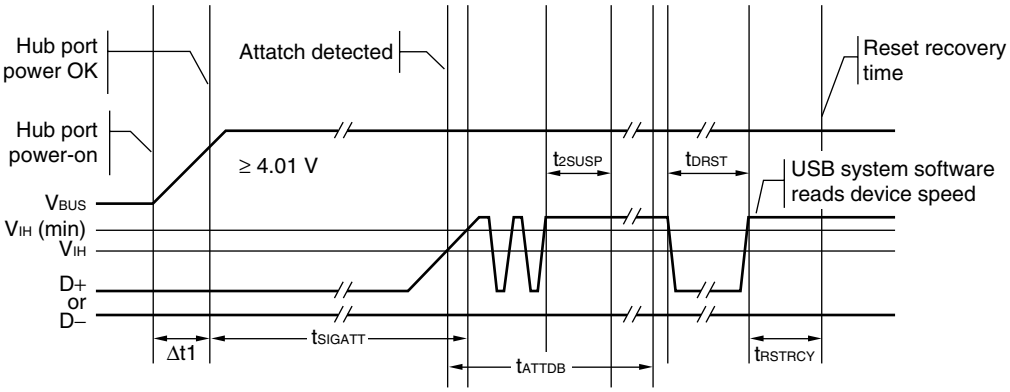

3. PACKAGE DRAWING

80-PIN PLASTIC TQFP (FINE PITCH) (12x12)

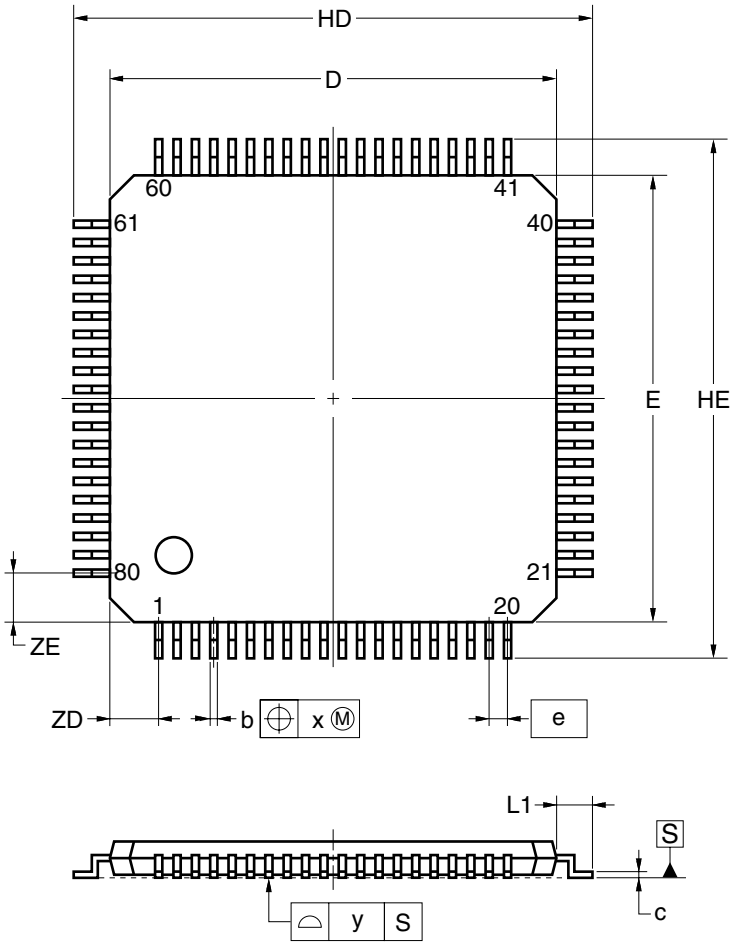

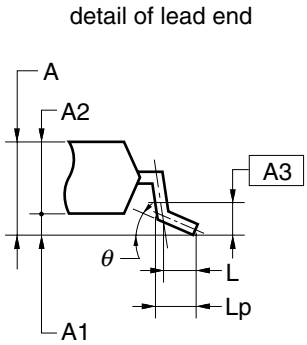

(UNIT:mm)

ITEM	DIMENSIONS
D	12.00±0.20
E	12.00±0.20
A2	1.00
HD	14.00±0.20
HE	14.00±0.20
A	1.10±0.10
A1	0.10±0.05
A3	0.25
Lp	0.60±0.15
b	0.22±0.05
c	$0.17^{+0.03}_{-0.07}$
θ	$3^{\circ}{}^{+4^{\circ}}_{-3^{\circ}}$
e	0.50
x	0.08
y	0.08
ZD	1.25
ZE	1.25
L	0.50
L1	1.00±0.20

K80GK-50-9EU

NOTE
Each lead centerline is located within 0.08 mm of its true position at maximum material condition.

4. RECOMMENDED SOLDERING CONDITIONS

The μPD720113 should be soldered and mounted under the following recommended conditions.

For soldering methods and conditions other than those recommended below, contact an NEC Electronics sales representative.

For technical information, see the following website.

Semiconductor Device Mount Manual (http://www.necel.com/pkg/en/mount/index.html)

μPD720113GK-9EU: 80-pin plastic TQFP (Fine pitch) (12 × 12)

Soldering Method	Soldering Conditions	Symbol
Infrared reflow	Package peak temperature: 235°C, Time: 30 seconds max. (at 210°C or higher), Count: Three times or less Exposure limit: 3 days[Note] (after that, prebake at 125°C for 10 hours)	IR35-103-3
Partial heating	Pin temperature: 300°C max., Time: 3 seconds max. (per pin row)	–

Note After opening the dry pack, store it at 25°C or less and 65% RH or less for the allowable storage period.

[MEMO]

NOTES FOR CMOS DEVICES

① PRECAUTION AGAINST ESD FOR SEMICONDUCTORS

Note:

Strong electric field, when exposed to a MOS device, can cause destruction of the gate oxide and ultimately degrade the device operation. Steps must be taken to stop generation of static electricity as much as possible, and quickly dissipate it once, when it has occurred. Environmental control must be adequate. When it is dry, humidifier should be used. It is recommended to avoid using insulators that easily build static electricity. Semiconductor devices must be stored and transported in an anti-static container, static shielding bag or conductive material. All test and measurement tools including work bench and floor should be grounded. The operator should be grounded using wrist strap. Semiconductor devices must not be touched with bare hands. Similar precautions need to be taken for PW boards with semiconductor devices on it.

② HANDLING OF UNUSED INPUT PINS FOR CMOS

Note:

No connection for CMOS device inputs can be cause of malfunction. If no connection is provided to the input pins, it is possible that an internal input level may be generated due to noise, etc., hence causing malfunction. CMOS devices behave differently than Bipolar or NMOS devices. Input levels of CMOS devices must be fixed high or low by using a pull-up or pull-down circuitry. Each unused pin should be connected to V_{DD} or GND with a resistor, if it is considered to have a possibility of being an output pin. All handling related to the unused pins must be judged device by device and related specifications governing the devices.

③ STATUS BEFORE INITIALIZATION OF MOS DEVICES

Note:

Power-on does not necessarily define initial status of MOS device. Production process of MOS does not define the initial operation status of the device. Immediately after the power source is turned ON, the devices with reset function have not yet been initialized. Hence, power-on does not guarantee out-pin levels, I/O settings or contents of registers. Device is not initialized until the reset signal is received. Reset operation must be executed immediately after power-on for devices having reset function.

USB logo is a trademark of USB Implementers Forum, Inc.

- **The information in this document is current as of May, 2003. The information is subject to change without notice. For actual design-in, refer to the latest publications of NEC Electronics data sheets or data books, etc., for the most up-to-date specifications of NEC Electronics products. Not all products and/or types are available in every country. Please check with an NEC Electronics sales representative for availability and additional information.**
- No part of this document may be copied or reproduced in any form or by any means without the prior written consent of NEC Electronics. NEC Electronics assumes no responsibility for any errors that may appear in this document.
- NEC Electronics does not assume any liability for infringement of patents, copyrights or other intellectual property rights of third parties by or arising from the use of NEC Electronics products listed in this document or any other liability arising from the use of such products. No license, express, implied or otherwise, is granted under any patents, copyrights or other intellectual property rights of NEC Electronics or others.
- Descriptions of circuits, software and other related information in this document are provided for illustrative purposes in semiconductor product operation and application examples. The incorporation of these circuits, software and information in the design of a customer's equipment shall be done under the full responsibility of the customer. NEC Electronics assumes no responsibility for any losses incurred by customers or third parties arising from the use of these circuits, software and information.
- While NEC Electronics endeavors to enhance the quality, reliability and safety of NEC Electronics products, customers agree and acknowledge that the possibility of defects thereof cannot be eliminated entirely. To minimize risks of damage to property or injury (including death) to persons arising from defects in NEC Electronics products, customers must incorporate sufficient safety measures in their design, such as redundancy, fire-containment and anti-failure features.
- NEC Electronics products are classified into the following three quality grades: "Standard", "Special" and "Specific".
  The "Specific" quality grade applies only to NEC Electronics products developed based on a customer-designated "quality assurance program" for a specific application. The recommended applications of an NEC Electronics product depend on its quality grade, as indicated below. Customers must check the quality grade of each NEC Electronics product before using it in a particular application.
  "Standard": Computers, office equipment, communications equipment, test and measurement equipment, audio and visual equipment, home electronic appliances, machine tools, personal electronic equipment and industrial robots.
  "Special": Transportation equipment (automobiles, trains, ships, etc.), traffic control systems, anti-disaster systems, anti-crime systems, safety equipment and medical equipment (not specifically designed for life support).
  "Specific": Aircraft, aerospace equipment, submersible repeaters, nuclear reactor control systems, life support systems and medical equipment for life support, etc.

The quality grade of NEC Electronics products is "Standard" unless otherwise expressly specified in NEC Electronics data sheets or data books, etc. If customers wish to use NEC Electronics products in applications not intended by NEC Electronics, they must contact an NEC Electronics sales representative in advance to determine NEC Electronics' willingness to support a given application.

(Note)
(1) "NEC Electronics" as used in this statement means NEC Electronics Corporation and also includes its majority-owned subsidiaries.
(2) "NEC Electronics products" means any product developed or manufactured by or for NEC Electronics (as defined above).