Fraunhofer Institut Mikroelektronische Schaltungen und Systeme

13.56 MHz Read-Only Transponder with Anticollision-Protocol

Function

The reader station and the tag (transponder) communicate through a magnetically coupled radio frequency link. The tag is powered by the radiated RF-field of the reader. The unduced voltage in the antenna of the tag is converted to the tags operating voltage.

The advantage of powering the tag through a RF-field and not by a battery is cost reduction, no restriction to possible operating times and temperatures, extremly small packages and no safety problems due to battery leakage. This is very important in e.g. industrial applications or animal implants.

The power management unit generates a Power-On-Reset-Signal out of the supply voltage (fig. 4). The clock signal is generated by dividing the RF frequency.

For data transmission from reader to tag the carrier signal is modulated by the ASK method. The receiver demodulates the received ASK modulated signal and is responsible for the CRC-Codecheck. The tag is controlled by a State Machine which handels the protocol and system management.

The OTP-memory contains user specific data, configuration data and a unique identification number. This memory is writeable from the user by the programming interface. That interface is only accessable by a wired connection, not by the contactless RF-link.

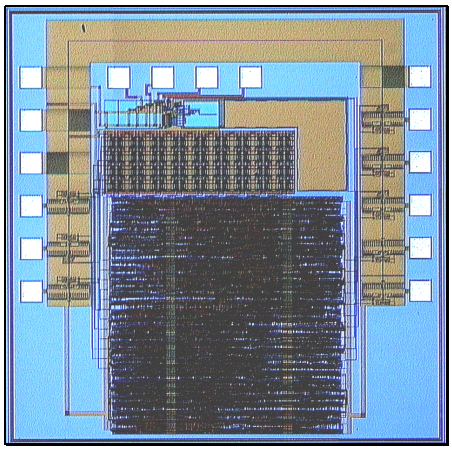

Fig. 1: Chipphoto of the Transponder-ASIC

Fraunhofer-Institut für Mikroelektronische Schaltungen und Systeme

Finkenstraße 61
D - 47057 Duisburg
Phone: +49 (0) 2 03 / 37 83-0
Fax: +49 (0) 2 03 / 37 83-266
Internet: http://www.ims.fhg.de

Contact:
Michael Bollerott
Phone: +49 (0) 2 03 / 37 83-227
E-Mail: bollerot@ims.fhg.de
Martin van Ackeren
Phone: +49 (0) 2 03 / 37 83-227
E-Mail: vackeren@ims.fhg.de

TÜV CERT
DIN EN ISO 9001
Zertifikat: 09 100 5263

The antenna coil can be a printed coil on a PCB Carrier. To build up a resonant antenna circuit, the necessary capacity is integrated on the chip. The adjustment of the capacity and the antenna circuit is possible by programmable switches. The programming of the capacitance is done during the wafertest.

Data Memory

The data memory of the Transponder ASIC is realized with OTP-Cells and contains two parts:
a fixed code identification number, and a user programmable area.

The 32 bit identification number is programmed during the wafertest.

The user programmable area can be accessed by a special programming interface after the assembly of the chip. The size of this memory is 32 bit.

Protocol

The Anticollision/Multi-Tag-Protocol works on the basis of the TDM (Time Division Multiplexing) and allows theoretically the readout of up to 200 tags in the same RF-field.

Data rate

By the reader station transmitted data: 53 kBit/s.

The response of the ASIC:
106 kBit/s.

This datarate allows the safe readout of up to 100 tags in less than one second.

Applications

Safe and protected storage of important product data.

Secure readout of all tags with one RF-field in a short period of time.

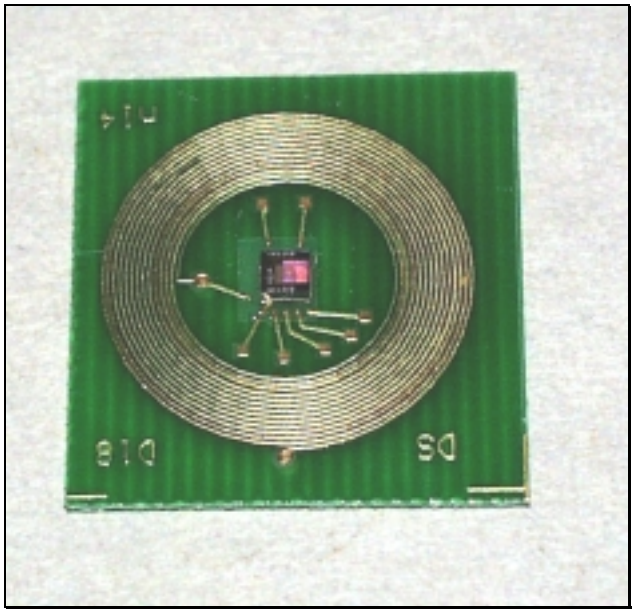

Fig. 2: On PCB mounted chip with a printed coil as antenna

Parameter	Symbol	Min.	Typ.	Max.	Unit
Operating temperature	ϑo	0		70	C
Supply voltage	VCC	2.0	2.5	5.0	V
Carrier frequency	fTr	13.52	13.56	13.60	MHz

Fig. 3: Operating parameters of the Transponder ASIC

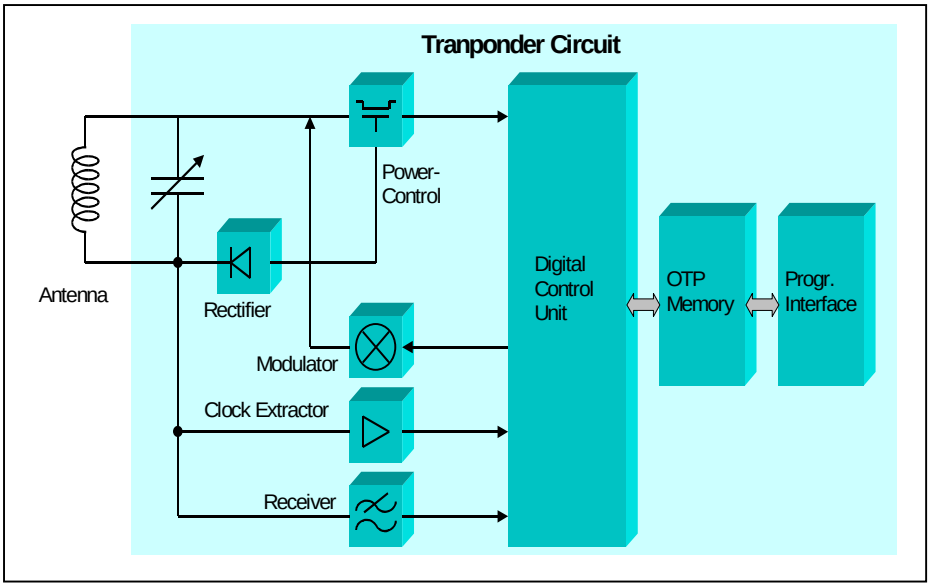

Fig. 4: Block diagramm of the Multi-Tag Transponder